Let's communicate

Adapters for simplex transmission of binary signals over the multimode fiber optic

ELO E204, E205, E206

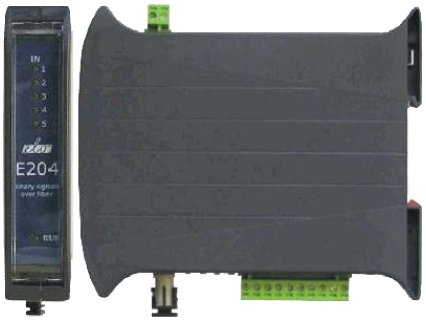

Characteristics

Unidirect transfer of 5 binary signals
Data error and Link error indication
DIN rail mounting
Supply voltage 9 – 24 V DC nominal
Range p to 2 km
Multimode fibre 50/125 or 62,5/125 µm

Introduction

Data transmission over the fiber optic is suitable in such applications, where noise induction in metal conductors can interfere with transferred data or even destroy devices. It may be also appropriate to connect devices with high voltage potential over the fiber optic link.

Use of the multiplexers

Binary data signaling is still concern of the fire protection and security field. It is usable in automation application too.

Operation principles

Models ELO E204 and ELO E205 are multiplexing five binary input signals. Inputs are periodically sampled, coded and transmitted from input unit over the optical link.

Inputs are galvanic isolated. They are fitted with input current limitation to 6 mA.

Model ELO E205 contains a 24V/40mA supply, which is galvanic isolated (clamps „Src“). It is suitable if it is necessary to transmit for instance a relay contact without potential.

Receiver ELO E206 decodes received packets and sets outputs O1 .. O5. Furthermore it indicate validity of the received data by „ON“ state on the „Valid“ output as an unit is checking transferred data. If there is any packet error detected, the „Valid“ output switches off, whereas data outputs stay in last good known conditions. If the error lasts for a few seconds, all outputs are subsequently switched off.

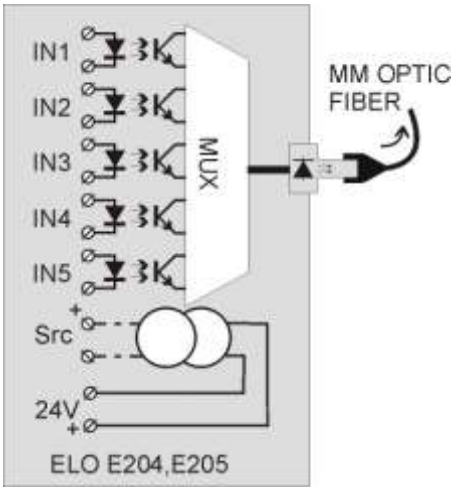

Outputs are fitted with SSR (Solid State Relay), MOSFET technology, 0.5A, 48V DC / 24V AC) .

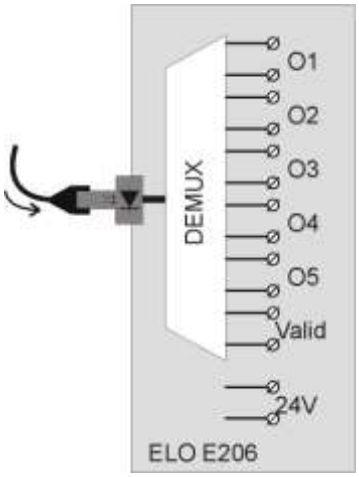

Input & output states are indicated on the front panel altogether with processor status and eventually transmission error.

Specification

Parameters

Binary inputs	galvanic isolated
Log. 0	0 – 3 V
Log. 1	> 4,5 V
Input current limiter	6 mA
Binary outputs	SSR,
Max. switched current	0.5 A
Max. switched voltage	48 V DC or 24 V AC
Optic fiber	multimode 50/125 or 62.5/125 µm
Optic connectors	ST
Typical range	2 km
Nominal supply voltage	9 – 24 V DC
Limit supply voltages	7 – 30 V DC
Power take off (24 V)	typ. 150 mA, max. 400 mA
Wave length	820 nm
Dimensions W x L x H	22,5 x 108 x120 mm
Weight	140 g
Storage temperature	- 10 ^{o} to +50 ^{o} C
Working temperature	+ 5° to +50° C

ELO+, spol. s r.o., CZ-397 01 Pisek,Za Nadrazim 2609, www.elo.cz, sales@elo.cz, +420 382 213 695, fax +420 382 213 069